3030 1W Series Datasheet

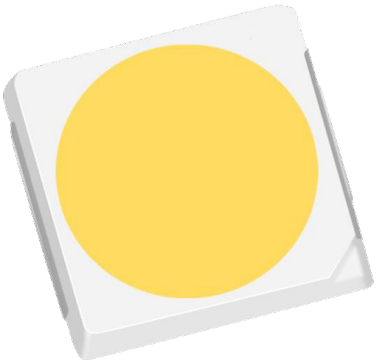

Features:

- Slim Size SMD Package: Design Flexibility
- High Lumen Output and High Efficacy
- Stable Performance & Great CCT Unity
- Wide Color Temperature Range
- High RA, can reach 95+
- Enviromental Friendly; ROHS Compliance
- Customized Service Available

Applications:

- LED Module, Illuminated Advertising
- Tube Light, Panel Light, Ceiling Lamp and other LED Indoor Lights
- Flood Light, High Bay Light, Tunel Light and other LED Outdoor Lights
- LED Studio Light, LED Aquarium Light, LED Plant Growing Light

Copyright ©2019 Graf Lichttechnik UG. All rights reserved. The information in this document is subject to change without notice.
www.graf-lichttechnik.de - GKORE is a registered trademark of Graf Lichttechnik UG

TABLE OF CONTENT

CHARACTERISTICS ---------- 3

CHARACTERISTIC CURVES ---------- 4

CHARACTERISTIC CURVES ---------- 5

CIE BINNING INFORMATION ---------- 6

RELIABILITY TESTS ---------- 7

SOLDERING CONDITIONS ---------- 8

DIMENSION ---------- 9

PACKAGING ---------- 10

PRECAUTIONS ---------- 11

Copyright ©2025 Graf Lichttechnik UG. All rights reserved. The information in this document is subject to change without notice.
www.graf-lichttechnik.de - GKORE is a registered trademark of Graf Lichttechnik UG

CHARACTERISTICS

SPECIFICATIONS(IF=350mA， Ta=25℃)					
Nominal CCT	TLCI	Color Rendering Index	Forward Voltage	Lumen @350mA	Part Number
1700K 1600-1800K	85	Ra94+	3.0-3.2V	70-85LM	A30001
3000K (2900-3100K)	95	Ra95+	3.0-3.2V	110-120LM	A30002
6000K (5800-6200K)	95	Ra95+	3.0-3.2V	120-140LM	A30003
6300K (6000-6500K)	95	Ra95+	3.0-3.2V	120-140LM	A30004

Parameters	Symbol	Value	Unit
Forward Current	I_F	350	mA
Power Dissipation	P_D	1200	mW
Reverse Voltage	V_R	5	V
Reverse Current	I_R	10	μ A
Viewing Angle	2θ 1/2	120	Deg
Thermal Resistance Junction	RΘJ-B	4	°C/W
Human Body Model	ESD	8000	V
Operating Temperature	T_{OPR}	-40 ~ +65	°C
Storage Temperature	T_{STG}	-40 ~ +85	°C
Reflow Sodering Temperature	T_{SLD}	260	°C

Copyright ©2025 Graf Lichttechnik UG. All rights reserved. The information in this document is subject to change without notice.
www.graf-lichttechnik.de - GKORE is a registered trademark of Graf Lichttechnik UG

RELATIVE SPECTRAL POWER DISTRIBUTION

CRI90 Min

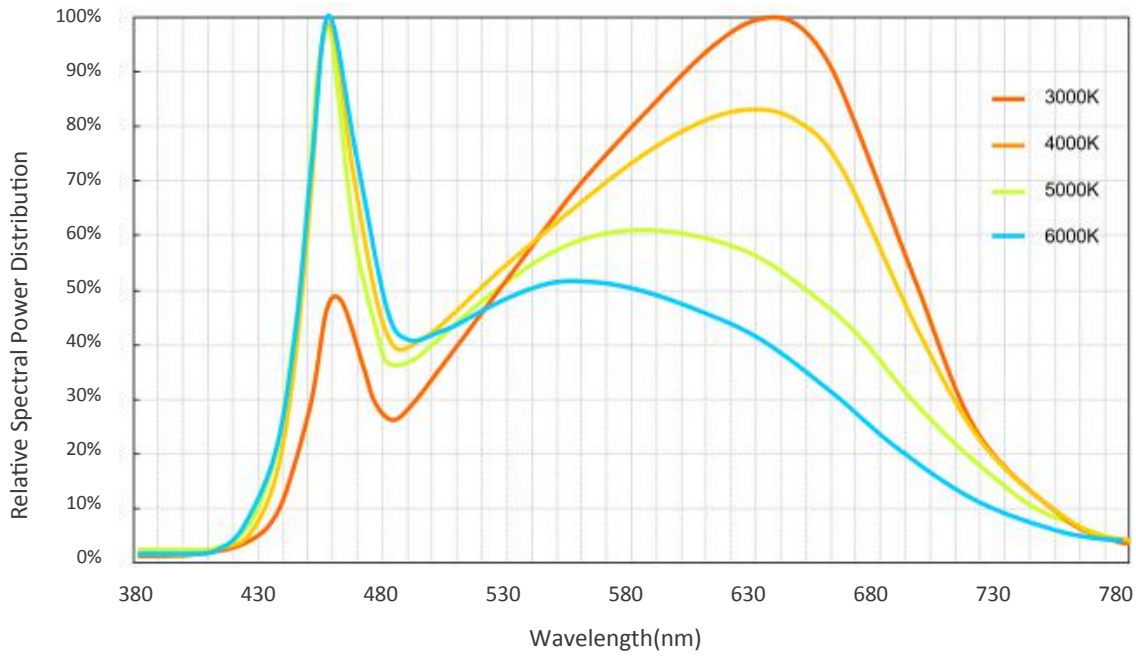

TYPICAL CHARACTERISTIC CURVES

IF=350mA

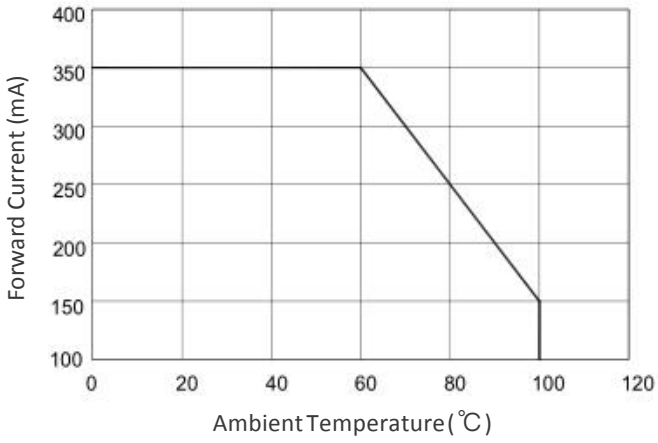

IF=350mA

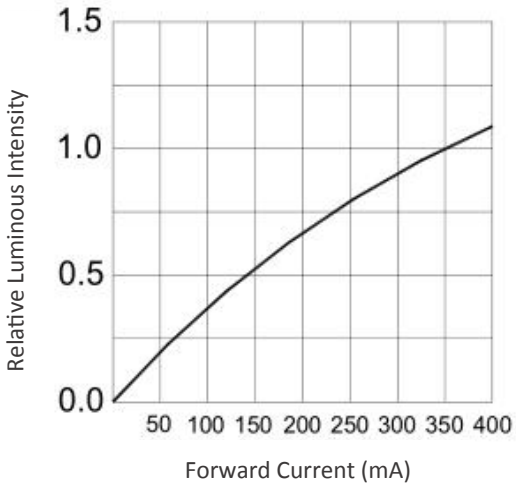

Copyright ©2025 Graf Lichttechnik UG. All rights reserved. The information in this document is subject to change without notice.
www.graf-lichttechnik.de - GKORE is a registered trademark of Graf Lichttechnik UG

TYPICAL CHARACTERISTIC CURVES

IF=350mA

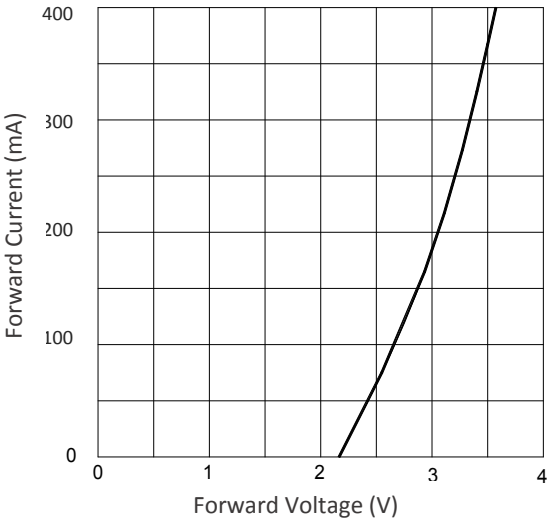

IF=350mA

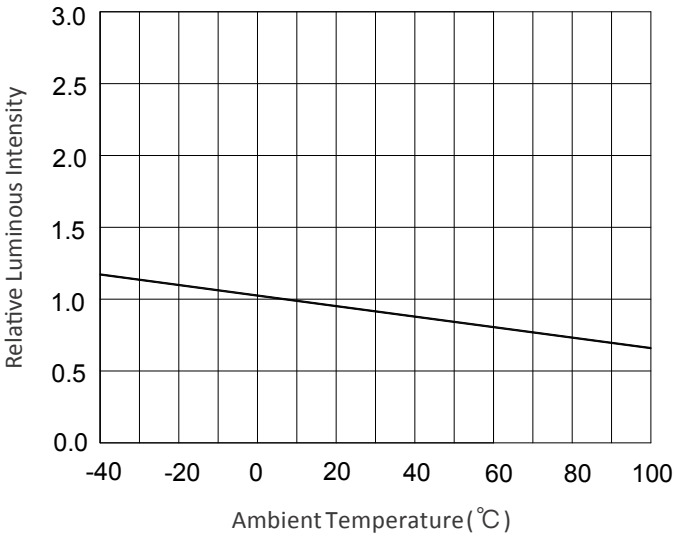

Intensity Distribution Diagram

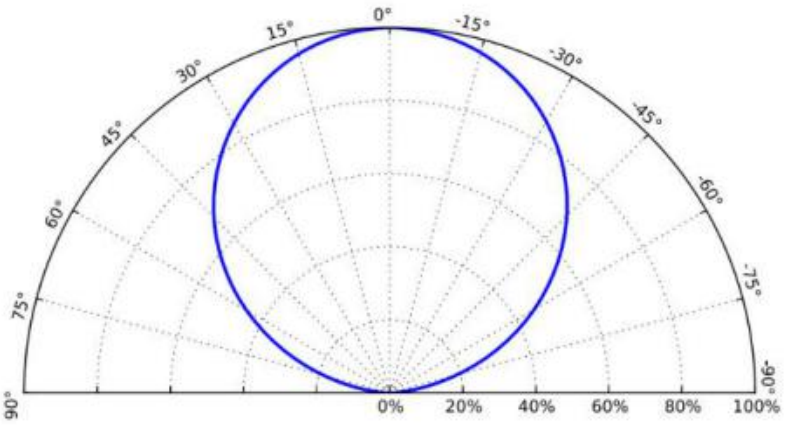

Copyright ©2025 Graf Lichttechnik UG. All rights reserved. The information in this document is subject to change without notice.
www.graf-lichttechnik.de - GKORE is a registered trademark of Graf Lichttechnik UG

CIE BINNING INFORMATION

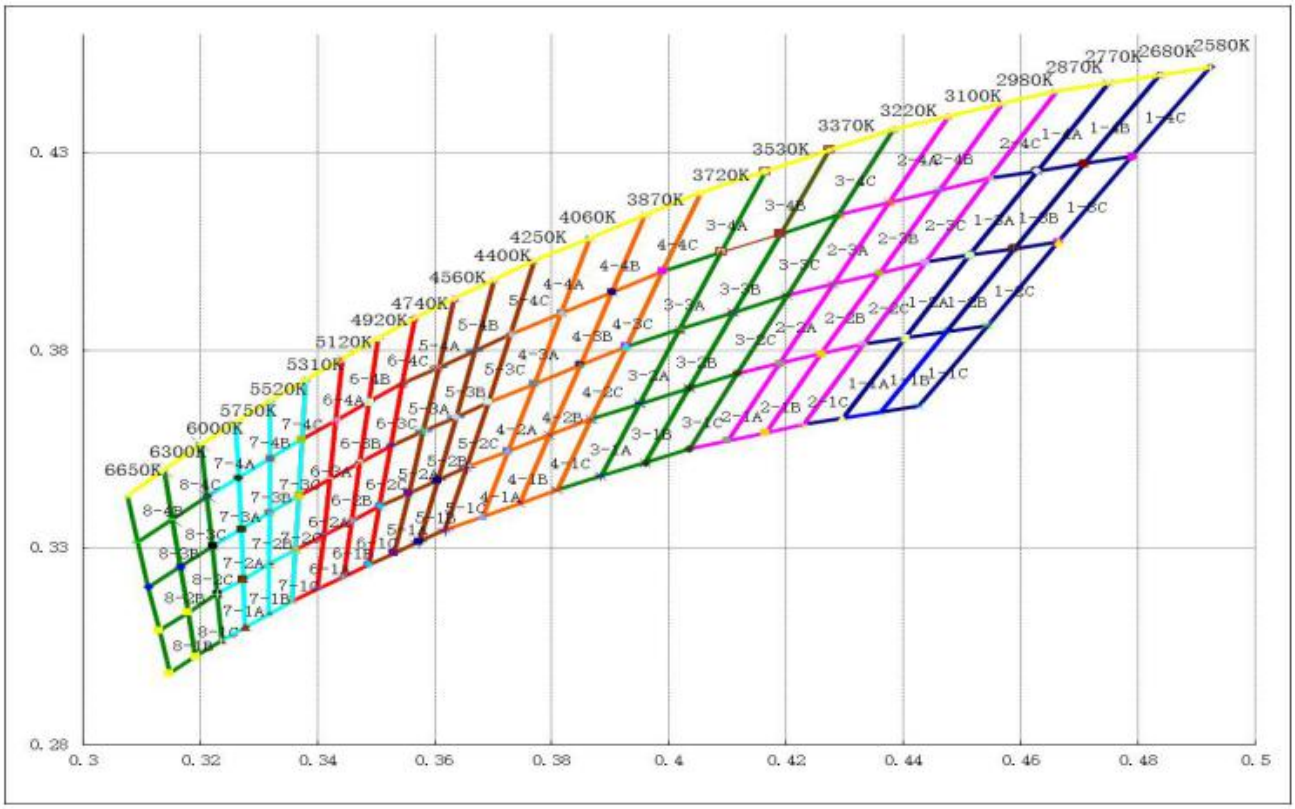

Copyright ©2025 Graf Lichttechnik UG. All rights reserved. The information in this document is subject to change without notice.
www.graf-lichttechnik.de - GKORE is a registered trademark of Graf Lichttechnik UG

RELIABILITY TESTS

Test Items	Test Conditions	Sample QTY	Ac/Re
Aging Test	IF=350mA, Ta=25℃ x6000hrs	22	0/1
	IF=350mA, Ta=85℃ x6000hrs	22	0/1
High Temperature Storage	100℃ x1000hrs	22	0/1
Low Temperature Storage	-40℃ x1000hrs	22	0/1
High Temp & Humidity	IF=350mA, 85℃, 85% RH for 6000hrs	22	0/1
Temperature Shock	-40℃x30 min & +100℃x30 min, 100cycle	22	0/1
ESD(HBM)	2000V HBM/ 1 Time	10	0/1

Criteria for Judging LED Failure (Tc= 25℃)

Items	Symbol	Test Conditions	Criteria for Judging LED Failure
Forward Voltage	VF	IF=350mA	>U x 1.1
Reverse Current	IR	VR=5V	IR>/= 10μA
Lumen	ΦV	IF=350mA	<S x 0.7

U refers to max value; S refers to initial value.

Notes: Judging criteria based on Tc=25℃.

Copyright ©2025 Graf Lichttechnik UG. All rights reserved. The information in this document is subject to change without notice.
www.graf-lichttechnik.de - GKORE is a registered trademark of Graf Lichttechnik UG

TYPICAL CHARACTERISTIC CURVES

REFLOW SOLDERING PROFILE

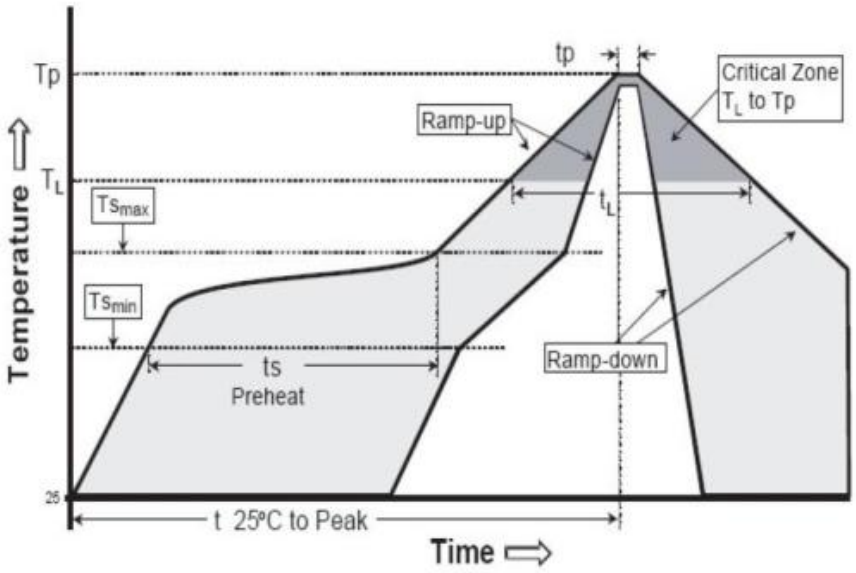

Profile Features	Lead-free solder	Lead solder	Soldering by Manual
Ramp-up Speed(Ts max to Tp)	3 °C/ second max.	3 °C/ second max.	Max. temperature: 350°C 3 seconds/1 time
Preheat: Min. Temperature(Tsmin)	150 °C	100 °C	
Preheat: Max.Temperature(Tsmax)	200 °C	150 °C	
Preheat: Time (tsmin to tsmax)	60~180 seconds	60~120 seconds	
Temperature to Keep: (TL)	217 °C	183 °C	
Time to Keep: (tL)	60~150 seconds	60~150 seconds	
Peak Temperature (Tp)	260 °C	215 °C	
Time within the peak temperature (tp)	20~40 seconds	10~30 seconds	
Ramp-down Speed	6°C/ second max.	6°C/ second max.	
Time to the peak Temperature	8 minutes max.	6 minutes max.	

Copyright ©2025 Graf Lichttechnik UG. All rights reserved. The information in this document is subject to change without notice.
www.graf-lichttechnik.de - GKORE is a registered trademark of Graf Lichttechnik UG

DIMENSIONS

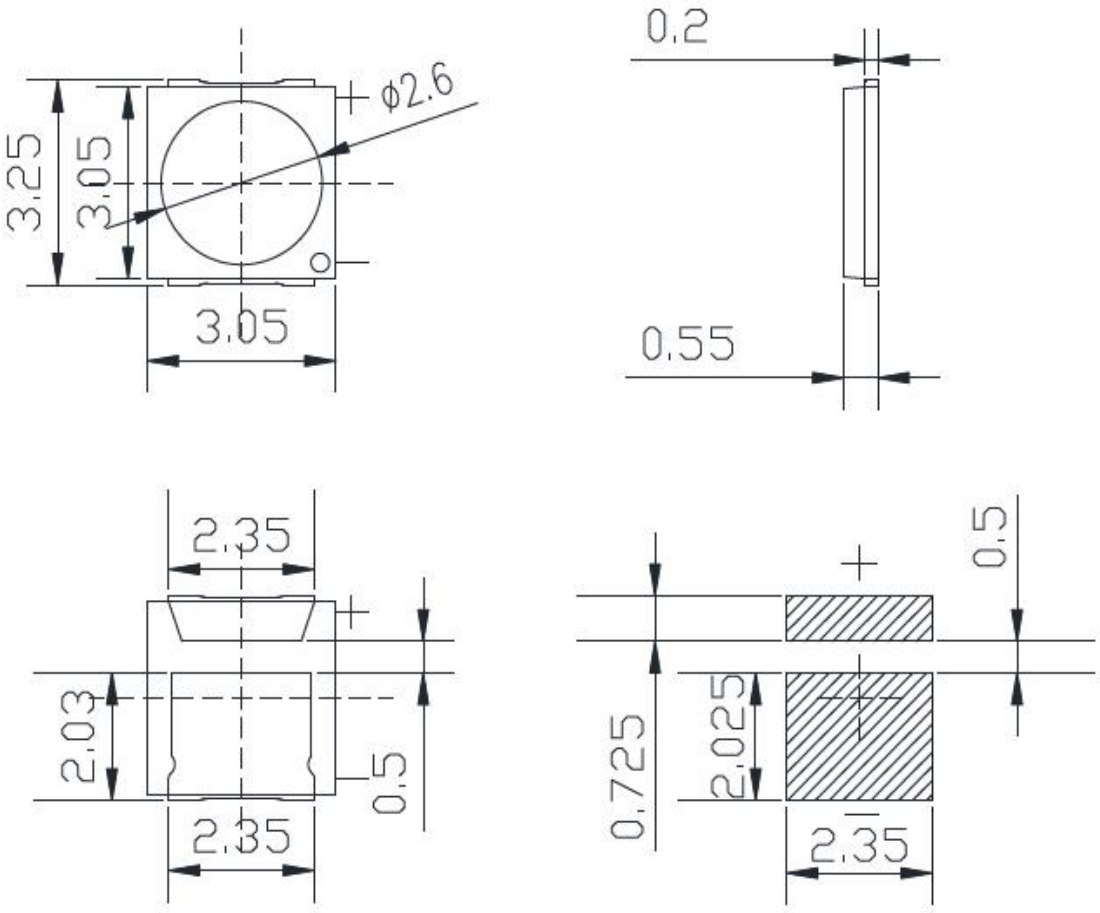

Notes：

*All dimensions are in millimeters.(tolerance:±0.2mm)

*The appearance and specifications of the product may be changed for improvement without notice.

Copyright ©2025 Graf Lichttechnik UG. All rights reserved. The information in this document is subject to change without notice.
www.graf-lichttechnik.de - GKORE is a registered trademark of Graf Lichttechnik UG

PACKAGING

Tape Specifications (Units : mm)

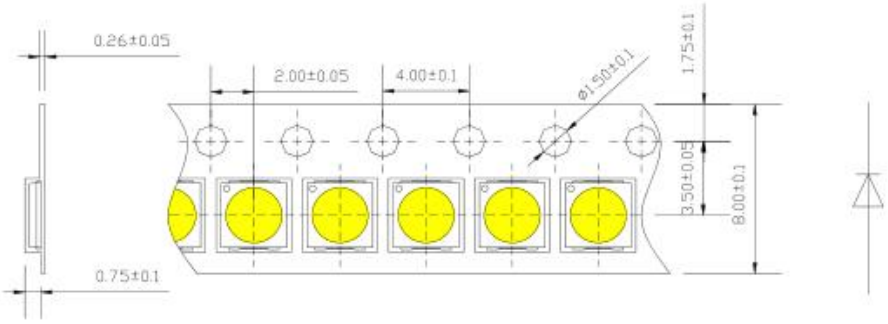

Reel Dimensions

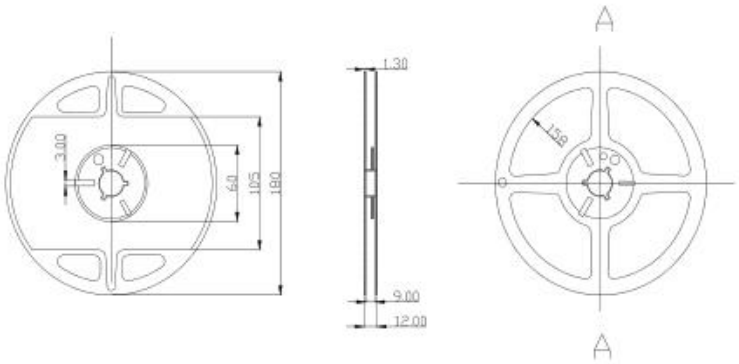

Moisture Resistant Packaging

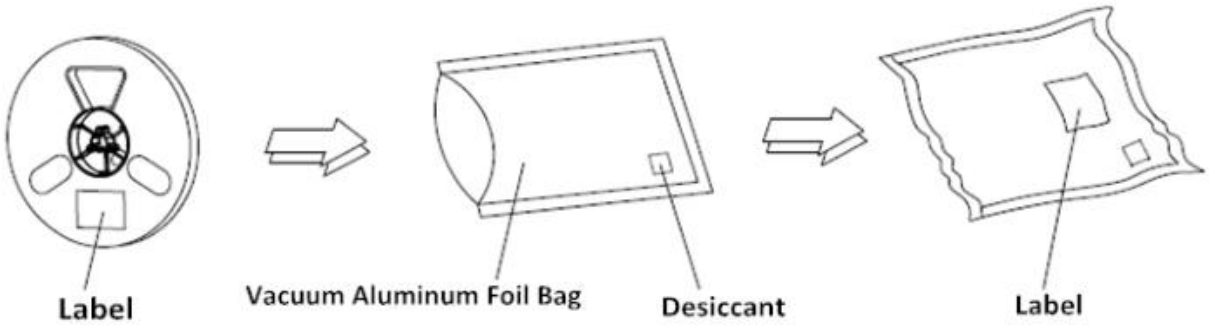

Copyright ©2025 Graf Lichttechnik UG. All rights reserved. The information in this document is subject to change without notice.
www.graf-lichttechnik.de - GKORE is a registered trademark of Graf Lichttechnik UG

PRECAUTIONS

1) Storage

Moisture proof and anti-electrostatic package with moisture absorbent material is used, to keep moisture to aminimum.

Before opening the package, the product should be kept at 30°C or less and humidity less than 60% RH, and beused within a year.

After opening the package, the product should be stored at 30°C or less and humidity less than 10% RH, and besoldered within 24 hours

(1day). It is recommended that the product be operated at the workshop condition of 30°C or less and humidity less than 60% RH.

If the moisture absorbent material has fade away or the LEDs have exceeded the storage time, baking treatment should be performed

based on the following condition:(70±5)°C for 24 hours.

2) Static Electricity

Static electricity or surge voltage damages the LEDs. Damaged LEDs will show some unusual characteristic such as the forward voltage

becomes lower, or the LEDs do not light at the low current. even not light.

All devices, equipment and machinery must be properly grounded. At the same time, it is recommended that wrist bands or anti-electrostatic gloves, anti-electrostatic containers be used when dealing with the LEDs.

3) Vulcanization

LED curing is due to sulfur being in bracket and the +1 price of silver in the chemical reaction generated Ag2S in the process. It will lead to the capacity of reflecting of silver layer reducing, light color temperature drift and serious decline ,seriously affecting the performance of the product. So we should take corresponding measures to avioding vulcanization, such as to avoid using sulphur volatile substances and keeping away from high sulphur content of the material.

4) Safety Advice For Human Eyes

Viewing direct to the light emitting center of the LEDs, especially those of great Luminous Intensity will cause great hazard to human eyes. Please be careful.

Copyright ©2025 Graf Lichttechnik UG. All rights reserved. The information in this document is subject to change without notice.
www.graf-lichttechnik.de - GKORE is a registered trademark of Graf Lichttechnik UG